Site Plan for 8.4kW Solar PV Install

at 94 Sanctuary Dr, Lake Ariel (Salem Township), PA

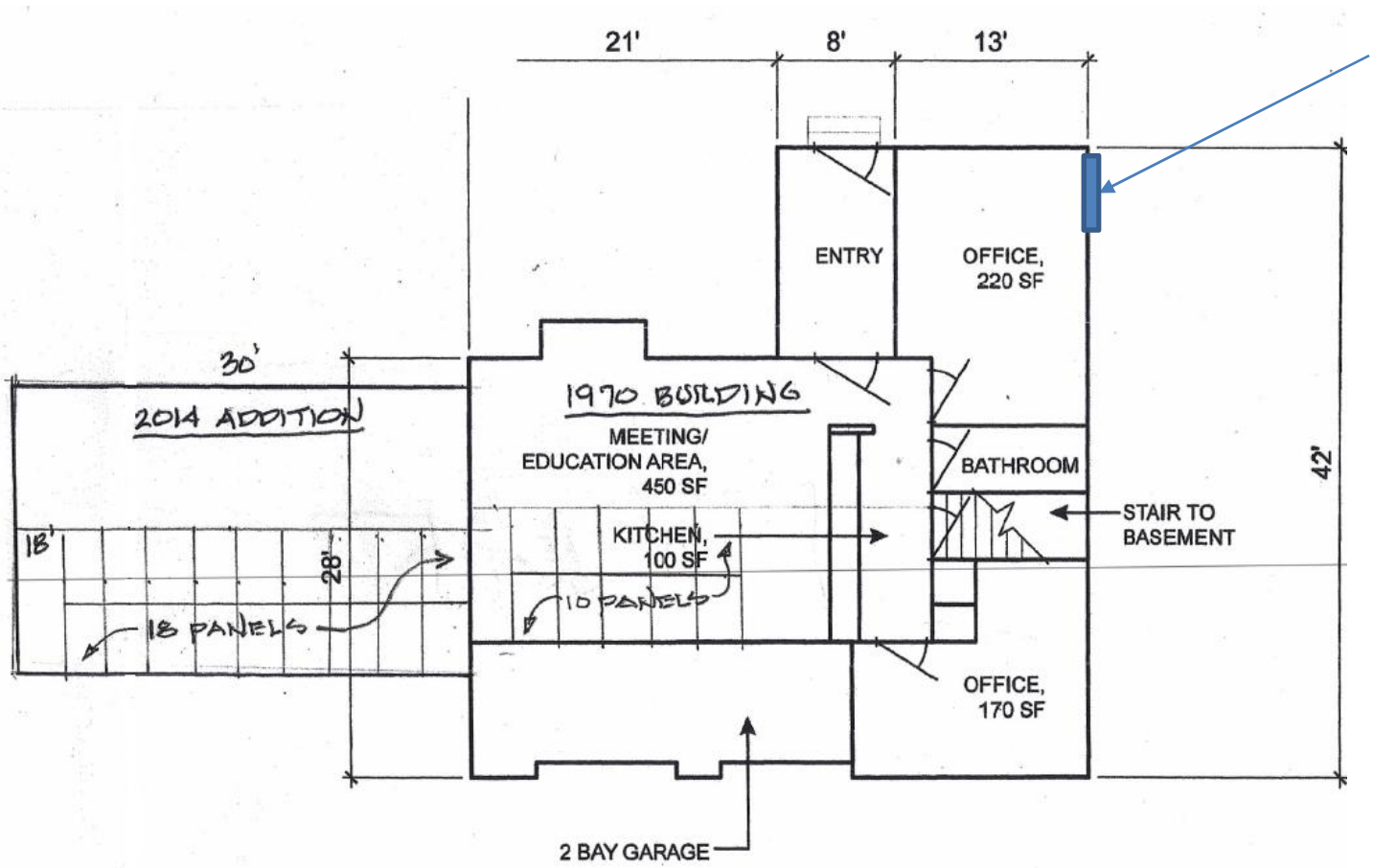

Existing PPL Meter #860 34 485
served via existing underground drop.
This wall will also be location of new:

- Solar Disconnect, ~2ft from existing PPL meter
- Aux production meter
- Envoy monitor w/in combiner/breaker box

with new 8ft ground rod nearby.

PA Licensed Electrician (volunteer) will install line-side tap to utility meter

2x 12/3 Romex within 1" PVC conduit, plus bare cooper ground wire, will be routed along southern ridge line (or within attic) to east gable, then along soffits to NE wall where meter is currently located

ENPHASE
IQ COMBINER

PHOTOVOLTAIC
COMBINER BOX

UL CERTIFIED
SAFETY US-CA
SÉCURITÉ US-CA
E341166

ELECTRICAL RATINGS:
VOLTAGE: 240VAC, 60Hz
DG BREAKERS: 80A MAX (COMBINED)
OUTPUT: 65A MAX, 90A MAX FEEDER OCPD
TEMPERATURE: 46°C MAX AMBIENT
USE ONLY EATON BR SERIES BREAKERS

S/N: 121751062030

P/N: 880-00814 26

CONNECTION	WIRE SIZES	TORQUE
DG BREAKER	14-10 AWG	2.2 Nm (20 lb-in)
	8 AWG	2.8 Nm (25 lb-in)
	6-4 AWG	3.0 Nm (27 lb-in)
60A CIRCUIT BREAKER ONLY	3-1/0 AWG	5.0 Nm (45 lb-in)
NEUTRAL AND GROUND	14-1/0 AWG	5.0 Nm (45 lb-in)
MAIN LUG	6-4 AWG	5.0 Nm (45 lb-in)
	3-2/0 AWG	5.6 Nm (50 lb-in)

COPPER CONDUCTORS ONLY, RATED MIN. 75°C.
FOLLOW NFPA 70 (NEC), OR CSA C22.1 PART 1, AND ALL LOCAL CODES.

FOR DG BREAKERS LARGER THAN 20 A, USE WIRE INSULATED FOR 90°C BASED ON 75°C AMPACITIES.

Designed in California and New Zealand
Made in China

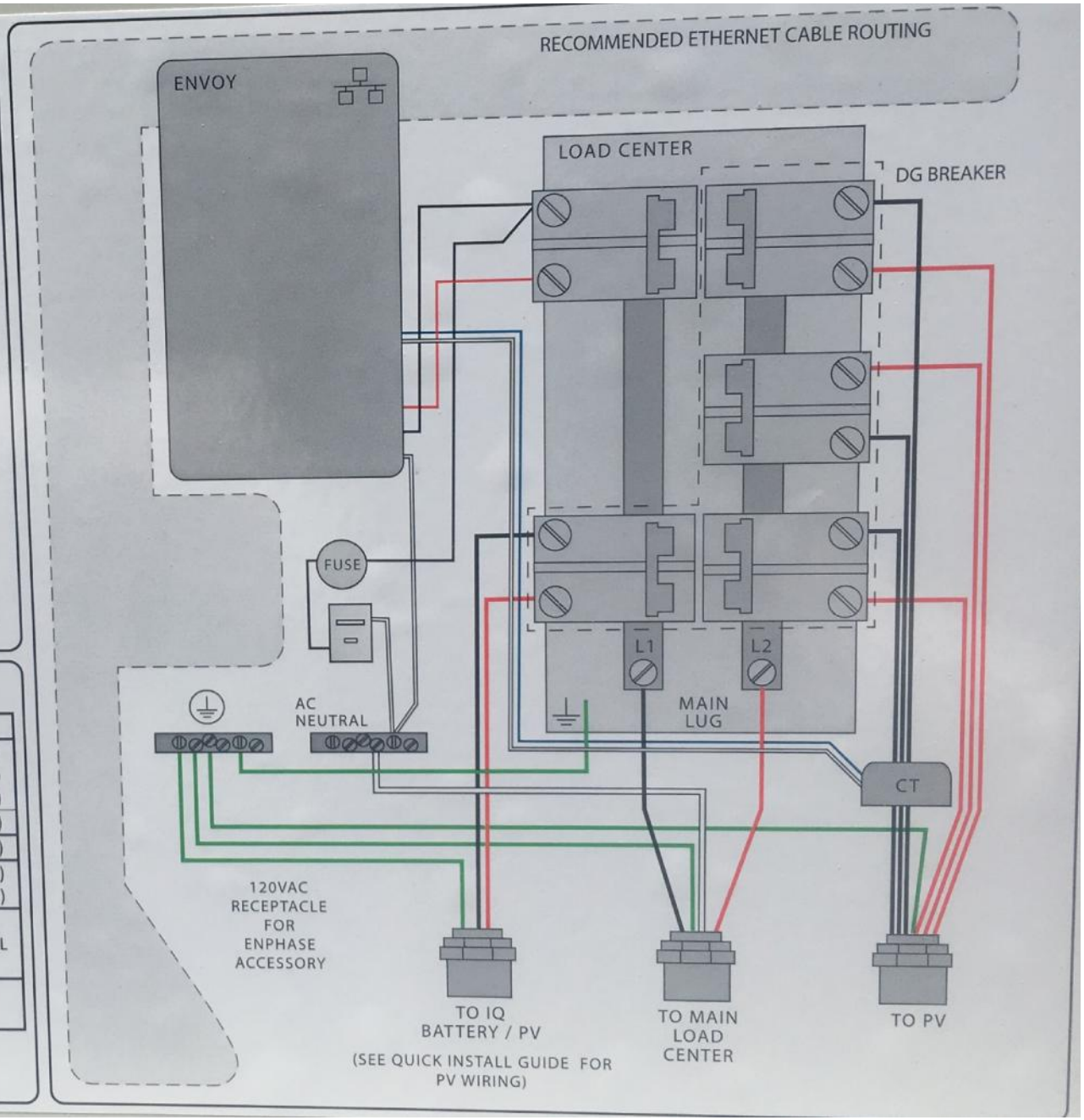

2. Apply (continued)

B. Community Permits (if required)

- Everything from Interconnect application
- Plus data sheet on racking, solar panels, other electrical elements, plus engineering reports for structural support
- Fees vary significantly

3. Order Equipment

Approved! Now What?

A: Order Equipment

- At least 2 weeks in advance
- Tractor Trailer Lift-gate Delivery Service

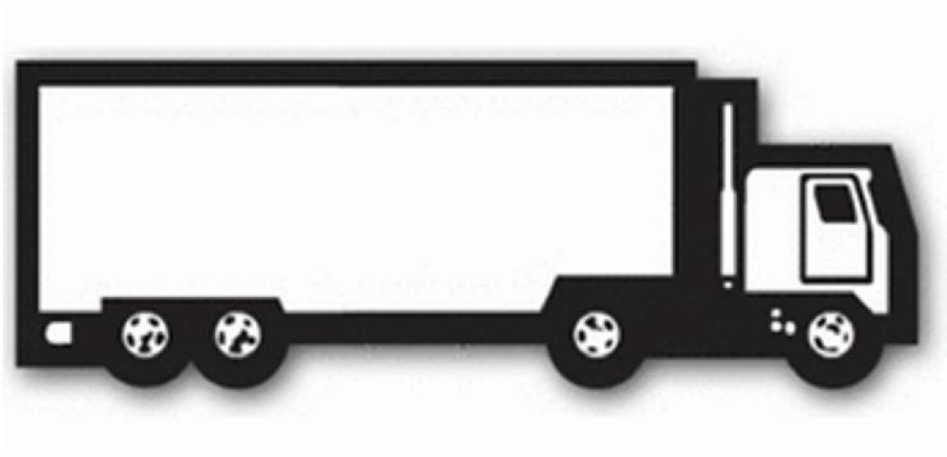

4. Install - Prep

Tools Needed:

- Ladders/Scaffolding
- Safety Harness & Line
- Chalk Line
- Cordless Drill/Wrench
- Hand Tools
- Ratchet and Sockets
- Pencil, Crayon, Sharpie
- Tape Measure
- Hammer
- Saw
- Caulk Gun
- Volt meter

Misc Equipment:

- Stainless-steel Lag Screws/bolts
- Roofing Caulk/Silicone
- Outdoor Zip-Ties
- Copper #6 wire
- Ground Rod & nut
- Weatherproof Junction Box(es)
- 12/3 Romex wire
- Conduit (if external)
- 20A 240v Circuit Breaker
- Exterior AC disconnect switch
- Meter base (for optional production meter)

4. Install: L-Feet

- Find Array Center, Top and one Side Edge
- Find Rafters 48”-64”
- Layout the Feet
  - Height on Panel - 12”-15” (from top & bottom)
  - Width on Panel – no more than 12”
  - Pre Drill (no larger than lag bore without threads)
- Install with Stainless-steel Lag
  - Silicone (or gaskets provided)

4. Install: Rails

- Rails
  - Align Starting End (either left or right)
  - Let other end run wild (saw off later)
- Splice Bars
- Bonding Lugs
- Bonding Wire

4. Install: Inverters

- Attach Inverter Trunk Cable to backside of Rails
  - Terminate one end
  - Zip-tie so no cables touch roof surface
- Attach Inverters
  - On to upper rail under each panel location
  - Attach copper bonding wire
  - Attach AC Connector to Trunk Cable
  - Zip-tie so no cables touch roof surface

4. Install: Inverters

4. Install: Panels

- Connect both DC connectors to Inverter
  - Zip-tie as needed
- End Clips
  - 12”-15” Rule
- Click, Zip, Clips
- Click, Zip, Clips
- Click, Zip, Clips
- End Clips

Here’s what’s it looks like from below:

4. Install: Wires

- Trunk Cable into WP Junction Box (attached to rail or roof)
- 12/3 Romex from JBox to Sub-panel &/or Production Meter
  - Conduit required if exterior
- Then to Outside Disconnect (near utility meter)
- Disconnect to Breaker (in existing panel or new subpanel)
  - Bottom of Panel Box
  - Labeled
- Bonding Wire to
  - Ground Rod and to
  - Existing House Ground
- Internet Monitoring box (Optional)

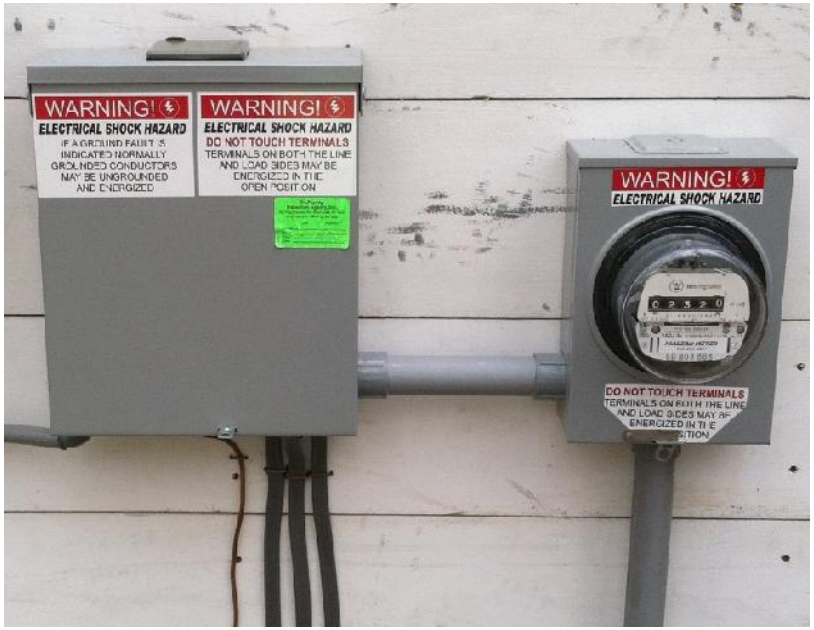

4. Install: Test it

- CHECK VOLTAGES
- TURN ON (briefly)
- COMMISSION – Internet Web Page or Smartphone App

5. Electrical Inspection

- Meet With Inspector On-site
- Needs to sign off on
  - Part Two of Utility Interconnection paperwork,
  - And “Cut In Card” (inspector files direct to utility),
  - Plus Community Permit (if applicable)

6. Paperwork – Part 2

- Send Utility: Part 2 of Interconnection and Cut-in Card (filed by inspector)
- Wait
- WAIT
- WAIT!!!

Turn on System for Real

- SAVE money
- SAVE environment
- SAVE your sanity

- Annual Maintenance:
  - Check wiring insulation for wear
  - Clean panels (optional)

More Solar Learning Opportunities

- Saturday, June 23 10am til done for DIYers: Help us finish Lacawac's PV system - weather permitting; raindate 24th.
  Please pre-regisiter at www.SeedsGroup.net
- Sunday, June 24 3pm-6pm: Learn about a larger scale, community solar project with the Clean Energy Co-op, being built this summer at Willow Wisp Organic Farm, in Damascus PA. Includes a farm tour and free food.
  Contact: CleanEnergyCoop@gmail.com
  or tannis@willowwisporganic.com

Thank you for coming!

If you are SEEDS member,…

or, become a member for just a $10 donation,

and you want a **Free Solar Site Assessment**

- Please send an email with your name, phone and site address to Jocelyn@SEEDSgroup.net
- One of our volunteers will then schedule a visit with you